FORMLABS WHITE PAPER:

Jewelry 3D Printing: Basic Design Parameters, Supports, and Orientation

October 2017 | formlabs.com

formlabs

Table of Contents

Introduction 3

Mechanics of Printing 4

Basics of Digital Design for Printing and Casting . . . 6

Orientation and Supports 18

Conclusion 23

Introduction

In order to best understand the techniques and parameters for developing a digital design for 3D printing, it is important to understand how your Form 2 desktop stereolithography 3D printer works. In addition to the process of hardening and building up very thin layers of resin with a laser, the layers undergo shear forces during printing as the printer resets and prepares each subsequent layer. Understanding the forces involved during printing aids in understanding parameters for both design and print preparation.

This paper presumes a working knowledge of a CAD modeling program with files that can be converted to STL or OBJ format. We used Rhino5, but the same principles apply to any CAD software that you are comfortable with. The models shown as examples make no claim to aesthetic value, but were created to demonstrate the principles described.

Another technical process, casting, should also influence the way the model is designed. Just because you are able to print a model on your Form 2 does not mean that it will cast successfully.

Mechanics of 3D Printing

OVERVIEW

Prints are built on the Form 2's build platform one very thin layer at a time. After each layer is printed, the platform resets to allow printing of the next layer. PreForm is Formlabs' free print preparation software. PreForm allows you to load multiple 3D files, then orient, position, and support your designs before sending them to the printer. It is not a design tool or a replacement for CAD software.

PRINTING PROCESS

The Form 2 uses a laser to harden a layer of resin between two surfaces submerged in the resin tank in a process called curing. The laser traces a path in a layer of resin determined by the cross section of your piece at many different heights, and begins at the "bottom" of your piece as it appears in the PreForm software. PreForm aids this process by slicing your piece in thicknesses determined by the layer height you choose. For jewelry models with fine detail, a layer height of 25 microns is recommended. The thinner the layer height, the more layers PreForm will generate, resulting in finer detail but longer build time.

The layout displayed in PreForm (Fig. 1) indicates how the print will be built from where it sits on the "floor" plane, from the "bottom" of your piece to the top of the piece. The view in PreForm is upside down from how the print will be generated in the printer (Fig. 2). PreForm displays the bottom of the build platform face up. In the printer, this surface descends down into the pool of resin, essentially building your piece upside down.

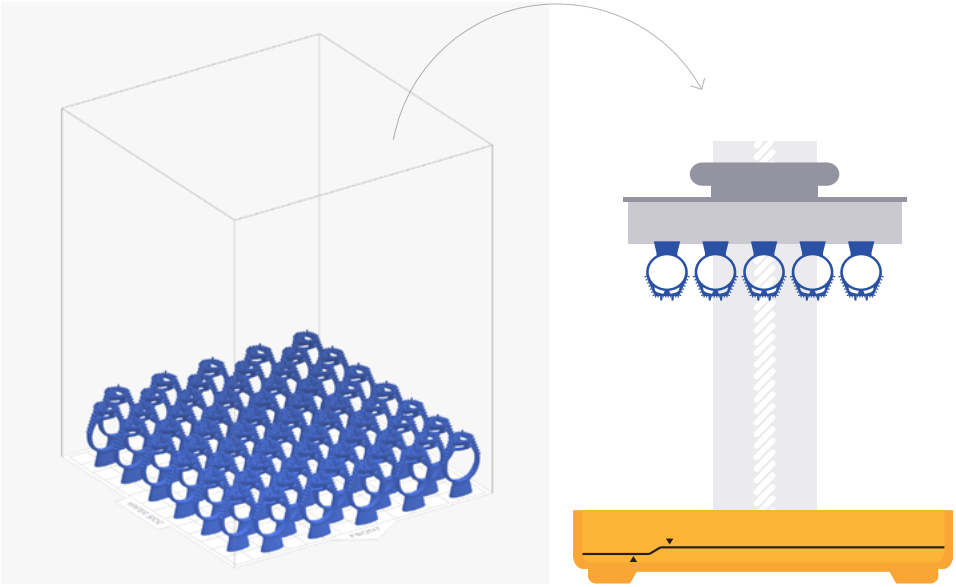

Figure 1: View in PreForm

Figure 2: Orientation in Printer

During the laser hardening process, the resin adheres strongly to the build platform and subsequent layers of resin, and adheres weakly to the optically clear silicone surface of the resin tank. The thickness of each build layer is determined by the distance between the two surfaces. For example, when you set a 50 micron layer thickness in PreForm, the machine will use that thickness to set the distance between surfaces for each subsequent layer (Fig. 3.1).

After each layer hardens, the build platform and attached layers must peel away from the silicone surface of the resin tank. The resin tank moves sideways relative to the build platform to accomplish this, and must overcome the adhesion and suction forces holding the resin layer to the silicone surface. Although necessarily weaker than the forces holding the part to the build platform, these sideway forces can cause distortion or failure in the printed part if not compensated for.

The flow of resin in the tank generated by the sideways peel motion is another force acting against the part. The build platform rises above the surface of the resin tank to allow the wiper to clear the build area from any debris or particulate that might interfere with hardening the next layer, and circulates the resin in the tank (Fig 3.2).

The various resins used for printing are initially hardened into shape with a laser beam. This initial forming process does not completely harden the resin. 3D prints straight off the machine are often referred to as being in the "green state."

After the print is finished, it must then be fully cured by a combination of heat and light. Standard materials, such as Grey, White, and Black, can be used for presentation models in the green state without additional curing. Functional resins, and particularly Castable Resin, require additional curing, as they are quite soft in the green state. A fully cured part will lead to better casting success. Thin parts cure more easily than thick parts, and a benefit of thin and light parts is that they have less mass to be controlled during the peel process.

For more information on the curing process, see our white paper: "How Mechanical Properties of Stereolithography 3D Prints are Affected by UV Curing."

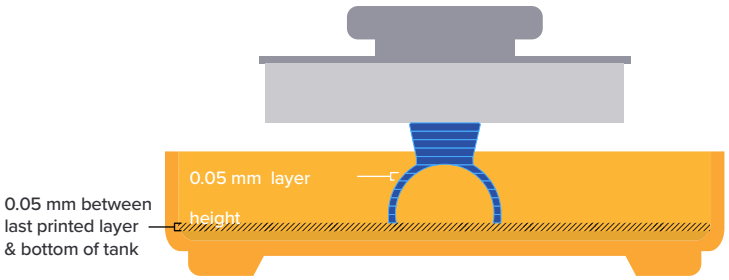

Figure 3.1: Not actual size, layer height enlarged for detail.

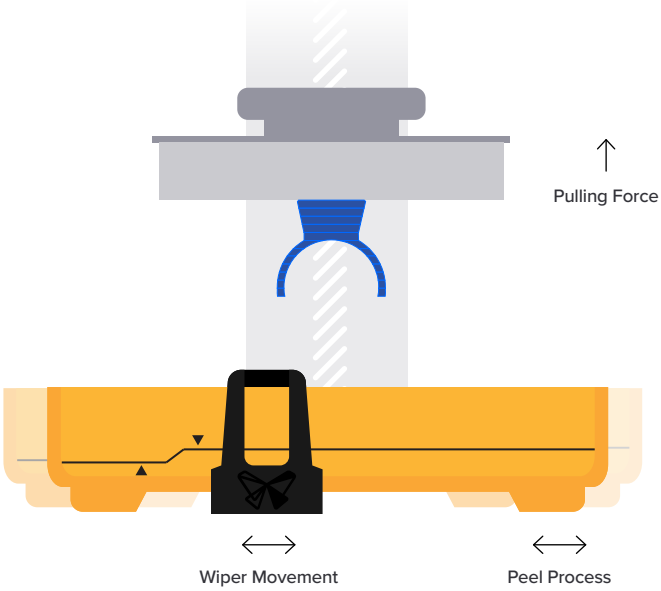

Figure 3.2: Tank moves horizontally, build platform lifts, wiper moves horizontally. Not actual size, layer height enlarged for detail.

Basics of Digital Design for Printing and Casting

OVERVIEW

Aside from creating beautiful designs, jewelry designers need to work within the parameters of cost and process by paying close attention to wall thicknesses and weight. Jewelry is typically designed to keep weight down due to costs of materials (precious metals) and wearability, yet give the illusion of reassuring volume. Keeping the weight down and wall thicknesses relatively thin helps achieve successful prints in a shorter time, and requires less resin for the build. A useful general resource on guidelines for technical details can be found in Formlabs' Design Specs.

The casting process has its own parameters for success, which will be addressed in this section. ***Just because you can print your design does not mean that you can successfully cast it!***

This paper presents a broad survey of some of the basics of digital design for jewelry printing and casting, and as such will only look at some basic principles and explanations. Please note that the following information is given as one of many approaches to the technical aspects of digital modeling, and we welcome feedback if you agree, disagree, or have a different way of modeling your jewelry.

WEIGHT AND WALL THICKNESS

As described earlier, there are significant forces acting on the print as it is built layer by layer. If a part is designed to be very heavy, it requires more support during the print process than a lighter part. If a part is designed to be very light, other considerations must be made to allow for successful printing and casting.

When designing small, light pieces, observe the minimum recommended wall thicknesses for the best results. The sample ring pictured below (Fig. 4.1 - 4.3) was modeled to demonstrate results of the same model with three wall thicknesses: 0.3 mm, 0.5 mm, and 0.75 mm.

The 0.3 mm wall thickness (Fig. 4.1) has two major issues: the prints walls are not straight, but significantly concave. This is a result of those very thin walls being subject to not only the peel and flow forces during the print process, but also any slight shrinkage of the resin during the cure process of printing and subsequent post curing.

The casting is incompletely filled on one side due to the thinness of the walls. If recast over several attempts, the part may or may not fill completely, but there is no way to overcome the deformation in the print.

At 0.5 mm wall thickness (Fig. 4.2), we see reliably complete fill, but there is some distortion and concavity in the side walls. We used a file to make several cuts along the surface photographed to show that the surface is indeed concave. It would be possible to continue filing to make that surface perfectly flat, but this would result in dangerously thin walls that would not withstand the stress of a customer wearing the ring.

A wall thickness of 0.75 mm (Fig 4.3) works well at this scale, with reduced distortion. The same several cuts of a file across the surface yield very minor surface depressions that can easily be filed to flat without much loss in wall thickness. The result is a structurally strong ring that will hold up to everyday wear.

Figure 4.1: Hollow center section modeled with 0.3 mm wall thickness. Note deformation of surfaces and incomplete fill.

Figure 4.2: Hollow center section modeled with 0.5 mm wall thickness. Filing flat across the surface demonstrates contrast with the center concavity of the wall.

Figure 4.3: Hollow center section modeled with 0.75 mm wall thickness. Filing flat across the surface demonstrates integrity of the flat surface.

Larger pieces must be designed at a practical weight for printing and manufacture. If a piece is too heavy, it will require a stronger network of supports during printing so that it does not detach from its build supports during the peel process.

From a practical standpoint, heavy pieces increase material costs, both final cast metal and resin used for printing, and perhaps cause customer dissatisfaction by being uncomfortably heavy to wear. If a piece is designed too light, it faces potential distortion caused by the peel and cure forces. An overly light piece may not be castable due to walls or components too thin to fill properly during the casting process, as noted above for small scale pieces.

As is common practice in the hand fabrication of jewelry, large pieces should be designed as hollow forms, with a minimum wall thickness that will maintain structural integrity and allow for everyday wear. The bangle bracelet pictured, with a width of 18 mm, has a wall thickness of 0.9 mm.

Three versions are shown over the next two pages (Fig: 5.1 - 5.3). The first (Fig. 5.1) is printed with a continuous surface all around, with the exception of a small 3.5 mm hole to allow for internal cleaning with isopropyl alcohol (IPA) and filling of the hollow bangle with investment for casting.

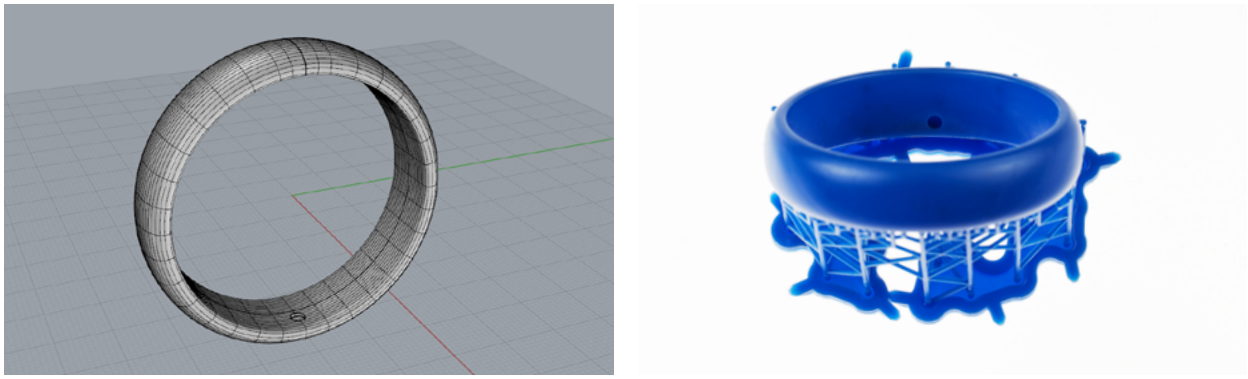

Figure 5.1: Digital and printed model of hollow bangle with one small hole for investment. Note the support structure necessary to build this part (see Orientation and Supports below).

The surface produced by the Form 2 is smooth and consistent, giving a form and surface ready for welding a plate in the small hole and final finishing. Unfortunately, this piece cannot be cast.

Here are the main reasons that any attempt at casting this piece will fail:

Washing and curing: it will be very difficult to wash and cure the internal surfaces of this hollow form, and uncured resin can react with casting investment to cause failure of the cast.

Investment 1: it will be very difficult to completely fill the inside of the bangle with investment, and even if was completely filled, it would be equally difficult to remove the investment after casting.

Investment 2: When the resin is burnt out, there will be a large piece of investment in the shape of the inside of the bracelet floating in space, known as a core, supported only by a 3.5 mm cylinder of investment that was the hole. That small cylinder of investment cannot support that core, especially when molten metal is cast at high velocity into the flask.

The second version (Fig. 5.2) simply adds more and larger access holes to the hollow inner of the bangle. These holes can be decorative and serve as an integral part of the design.

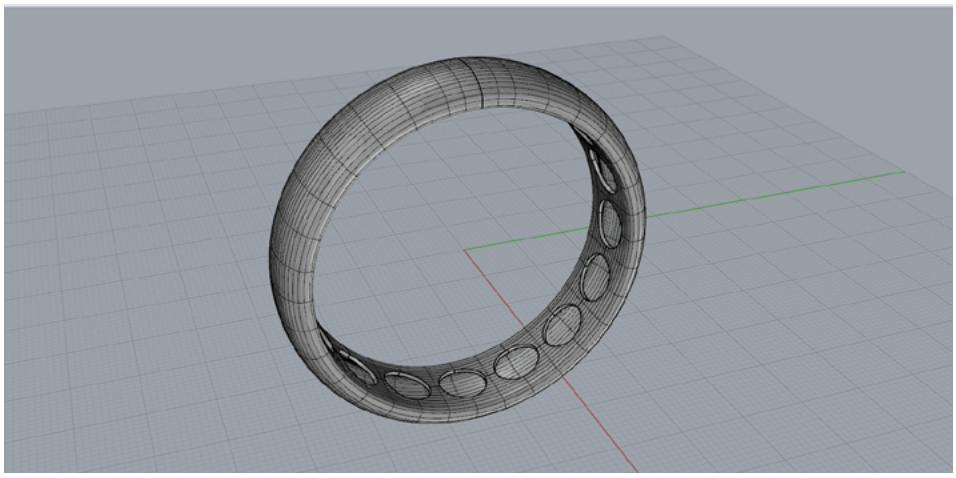

Figure 5.2: Digital model of hollow bracelet with multiple large openings in the inner surface to allow for successful investment and casting.

The third version (Fig. 5.3) builds the bangle in multiple parts. Use this approach if you want to close off all surfaces, or if you want to create a decorative pierced pattern inside the bracelet that has piercings too fine to successfully invest and cast the bangle in one piece. Building supports and keys in the model greatly simplifies the assembly.

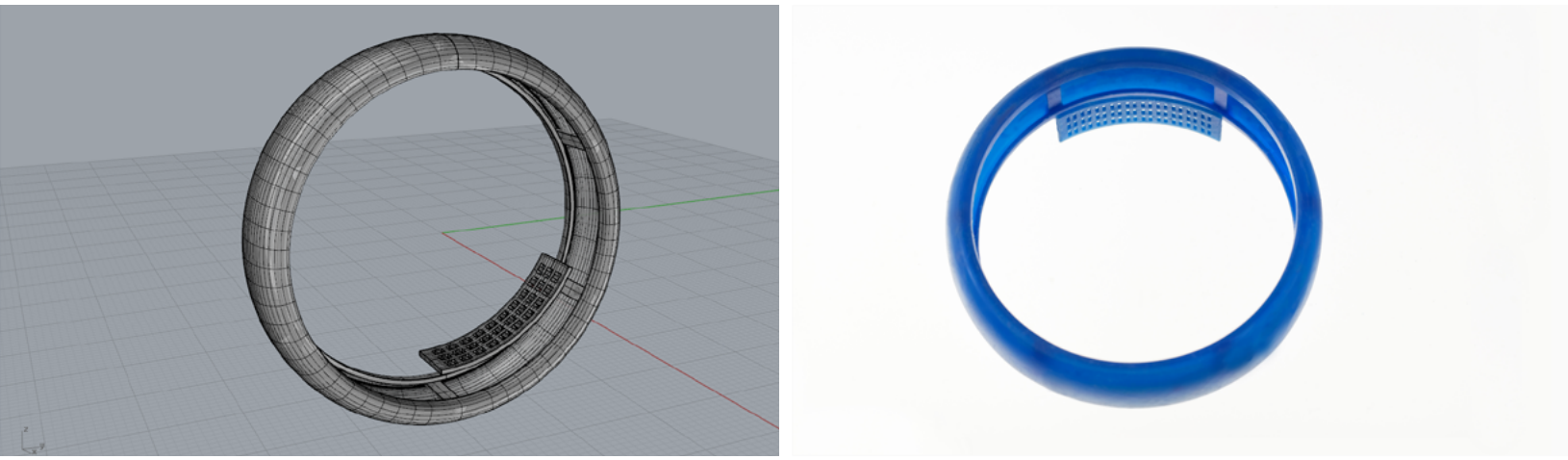

Figure 5.3: Digital and printed model of hollow bracelet with decorative inner surface. This example shows a pierced filigree type of surface divided into multiple parts (one of six total inner surfaces shown) that would prohibit complete and successful investment if printed as a one-piece bracelet.

PRONG SETTINGS FOR SMALL STONES

Most pieces of jewelry can be deconstructed into individual components. All of these components must be not only printable, but also castable. If we look at traditional stone set jewelry, we see individual mountings for stones ("settings"), and a structure to hold those settings together. Looking at an example of a ring consisting of multiple settings, we can break those settings down into prongs and bezels. The ring shown below (Fig. 6) has an 8 mm center stone and 2.5 mm side stones. For these 2.5 mm side stones, the bezel thickness was designed to be 0.4 mm, and the prong diameter 0.7 mm. Although for such small parts the bezel thickness can be successfully printed at 0.3 mm, such a thin wall may be problematic to cast. If the casting is successful, then finishing that casting could reduce that thickness to a dangerously thin wall. The 8 mm center stone has bezel and prong thicknesses proportionally greater at 1 mm, and this presents no problems both printing and casting.

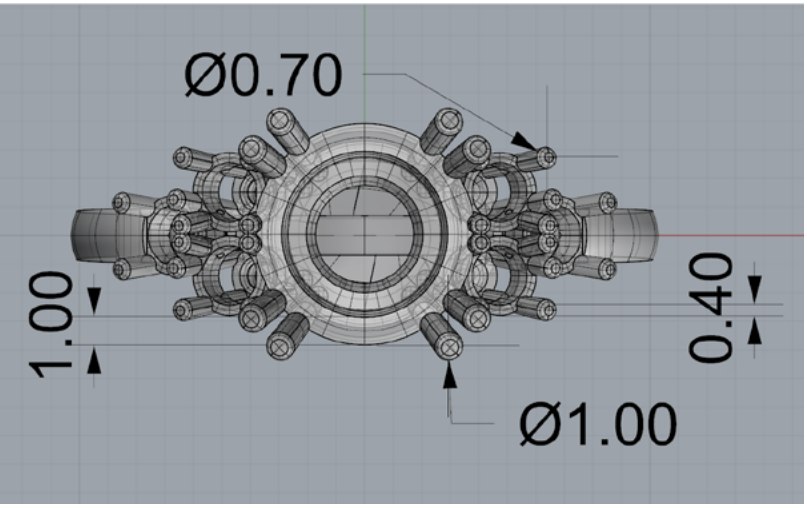

Figure 6: Digital, printed, and cast ring model for 8 mm center stone with 2.5 mm side stones.

When smaller stones are set within walls, similar considerations must be made regarding the wall thicknesses on either side of the stones and in prong diameter. In this type of structural and visual application, the wall thickness should be a minimum of 0.5 mm, with prongs a minimum of 0.5 mm.

If you create your model with vertical walls and prongs, spaced close to best fill the space with stones, then during the printing process the prong may fuse with the side wall (Fig. 7.1). Even if it maintains its space, then the casting investment will almost certainly break down at this point and the prongs will fuse with the wall (Fig. 7.2 - 7.3).

NOTES ON CASTING AND INVESTMENT:

The technique of lost wax casting (or in our case, lost resin casting) relies on encasing the part with a refractory material, investment, that forms a mold of the part and allows molten metal to fill the precise area of the part after that part is completely removed by burning at high temperature. Investment is very hard, but as with most very hard materials, it is also very brittle. Digital design for casting in metal requires understanding and planning for the negative (investment) as well as positive (resin, or metal after casting) spaces.

In the example above, consider what the very small space between prong and wall means to the investment. Once the resin part is burnt out, this very small length of investment must withstand the force of molten metal rushing into the mold at high velocity. In this case, it will not.

This yields two extremely important results:

1.) The investment breaks and the metal simply runs freely between prong and wall.

2.) There are now tiny particles of investment floating in the mix of molten metal. These particles cause a void, and they also may appear in the metal close to the surface. There are few things worse than the final polish revealing bits of investment.

These images illustrate vertical walls and prongs, and the very thin line of investment between prong and wall.

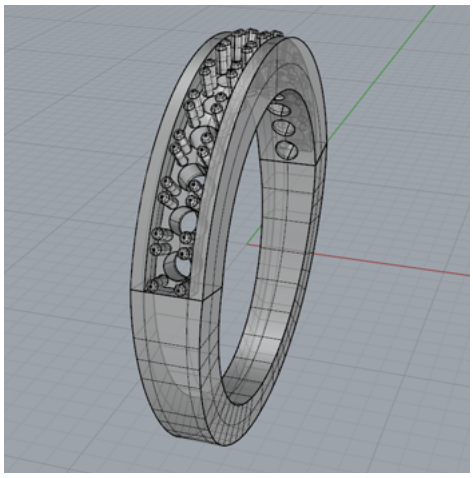

Figure 7.1: Digital model of ring with straight 0.5 mm walls and straight 0.5 mm prongs.

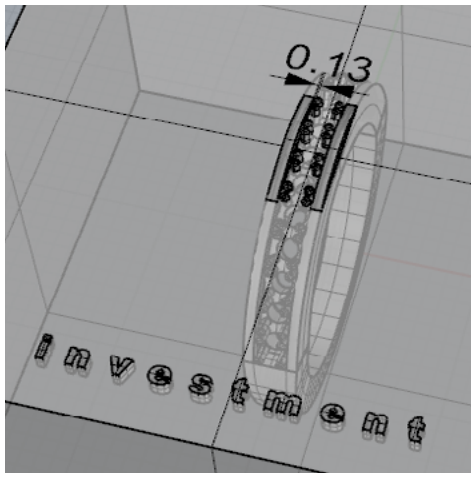

Figure 7.2: Castable-printed ring as invested before burnout and casting showing the spacing between walls and prongs.

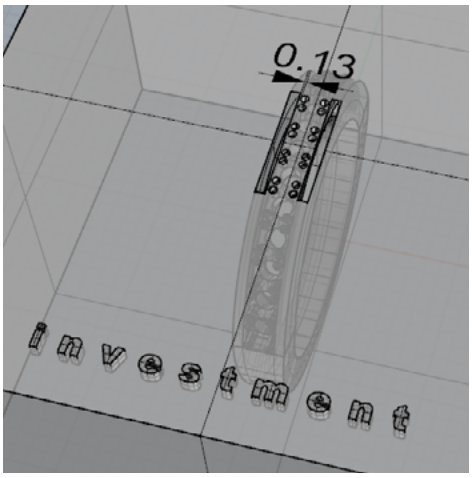

Figure 7.3: Investment after burnout of Castable part, before casting, showing negative spaces in investment between wall and prongs.

One way to solve this issue is by adding draft to side walls and prongs (Fig. 7.4 - 7.6). “Draft” is angling those walls and prongs so that they taper from a thicker base to a thinner top, and typically a 5 degree draft angle is sufficient to improve castability without being obtrusive. If the design supports it, a larger draft angle will always help.

This creates a stronger part with visually thinner edges, and yields a larger space between the upper part of the wall and the prong for the investment to be more rigorous in withstanding the casting forces. There may still be some closing of the space where the prong meets the wall at its base from printing and casting artifacts, but the upper part of the space will be defined and easier to cast.

This space, which previously only existed in the digital file because it was too small to be cast before draft was added, allows for more secure casting and provides a guide for setting the stones.

Although beyond the scope of this paper, draft in such details in a model also improves results in the moldmaking and subsequent wax injection processes. See our paper on Vulcanization from 3D Printed Parts for more information on that process.

By applying draft angle to our prongs, we increase the line of investment between prong and wall-making for improved casting success.

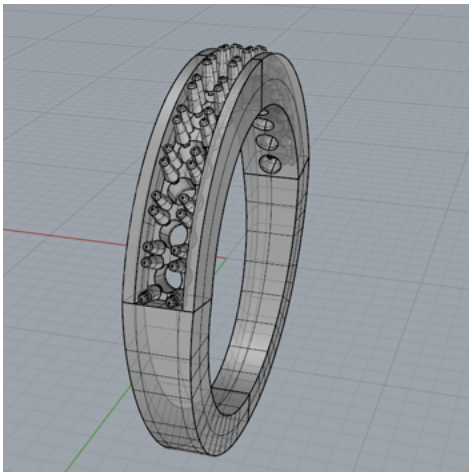

Figure 7.4: Digital model of previous ring (Fig. 7.1) with 5 degree draft in side walls and prongs.

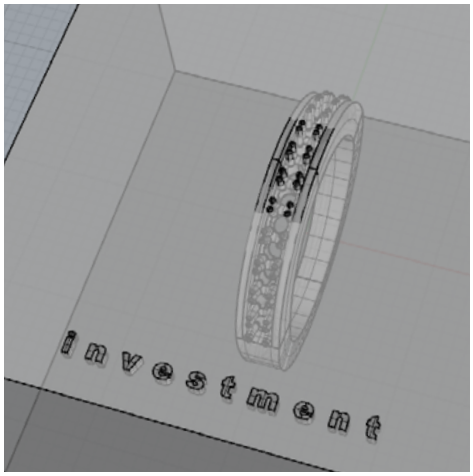

Figure 7.5: As previously (Fig. 7.2), revised invested part showing increased space between wall and prong.

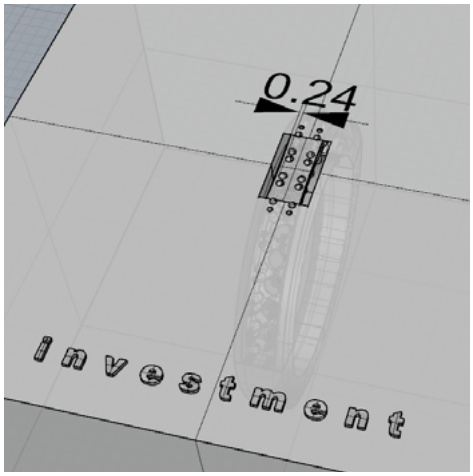

Figure 7.6: As previously (Fig. 7.3), investment after revised part has been burnt out, showing increased thickness of investment between wall and prong.

HOLES

For all practical purposes, through holes should have a minimum diameter of 0.5 mm, and that diameter only should be used for holes in very thin material. It is possible to cast smaller holes, but results may not be consistent in both printing and casting. In the ring pictured below (Fig. 8.1), a 0.5 mm hole was modeled in the center of the under bezel of settings (most likely there is no need for a hole this small, but it is a good example!). Such a small hole in a relatively thick piece of metal risks the investment breaking during casting and the hole filling. A filled hole can always be drilled through, but as mentioned above, seeing a filled hole means that there are particles of broken investment floating around in the casting looking to cause mischief. One solution is to simply indicate the ends of the through hole by differencing a sphere at both ends of the hole, providing a guide for drilling (Fig. 8.2).

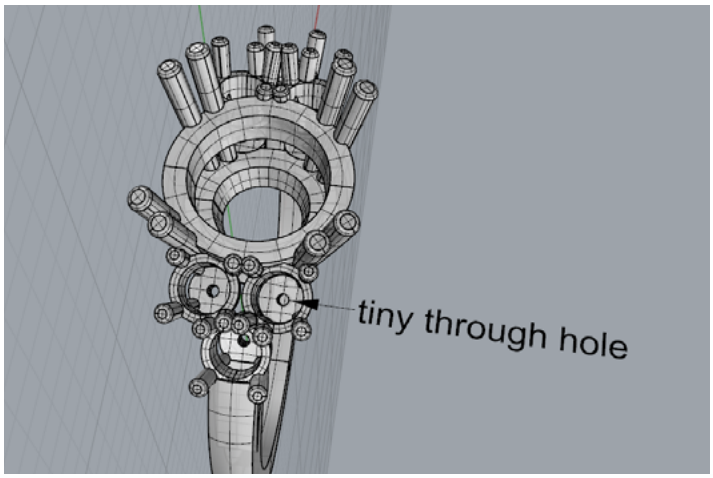

Figure 8.1: Digital model of ring with 0.5 mm through hole likely to fill during casting. Please note, this size hole is only for illustration. If this were a "real" model, the hole would be closer to 1.5 mm and would cast successfully.

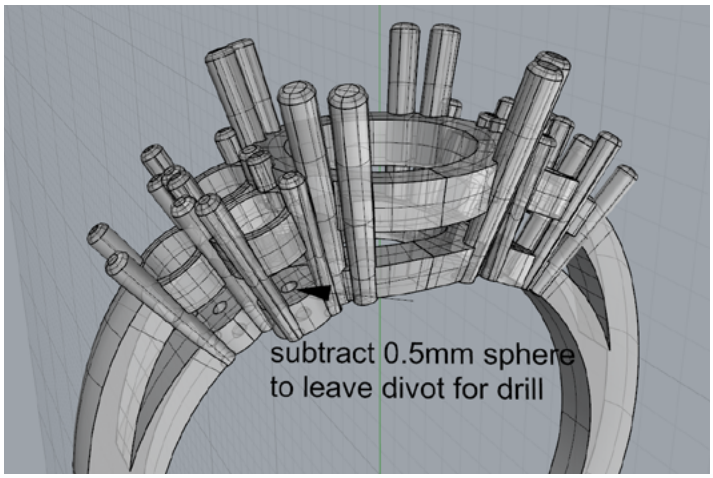

Figure 8.2: If small holes are necessary, drill them after the part is cast. Create a shallow divot that will have no problem casting. This will provide an accurate guide for drilling.

Another solution to printing and casting small through holes (Fig. 9.1) is to add ajours to the back of the hole (Fig. 9.2). This not only helps printing and casting, but saves weight and adds a decorative element.

Figure 9.1: Casting of ring, leaving small round through holes behind stones.

Figure 9.2: Casting of ring, modeled with rectangular ajours behind round stones to add visual interest and improve castability.

INTERNAL CORNERS

As we saw earlier, it is important to consider the negative spaces in your design, especially internal corners that may cause a problem with sharp edges of investment breaking off into the piece during casting. Consider the flow of metal into the investment mold, and how to make that flow as smooth as possible. Sharp edges, rough finishes, and even the sharp or depressed edges from supports that weren't removed smoothly can cause turbulence in the liquid metal. In the best case, the casting will be fine. In the worse case, this turbulence can cause porosity (think of waves coming in). Whenever possible, fillet internal edges (Fig. 10.1 - 10.2), and if the design can support it, external edges as well (Fig. 10.3 - 10.4). Spend time finishing your print, smoothing surfaces, and removing any artifacts.

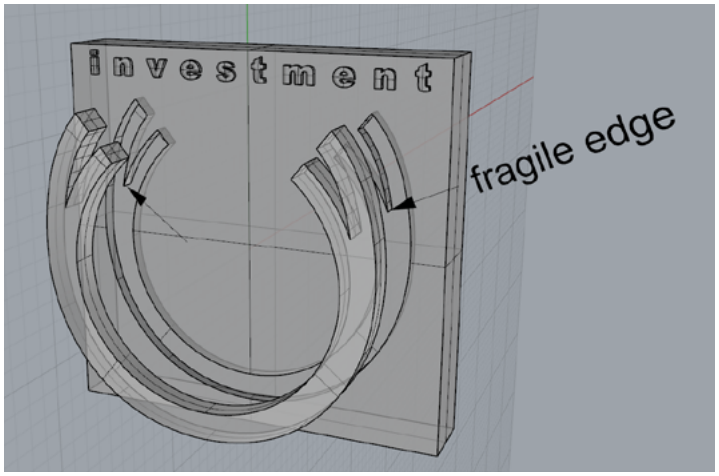

Figure 10.1: Sharp corner (negative space) in shank shoulder, the positive space of investment may break off during casting.

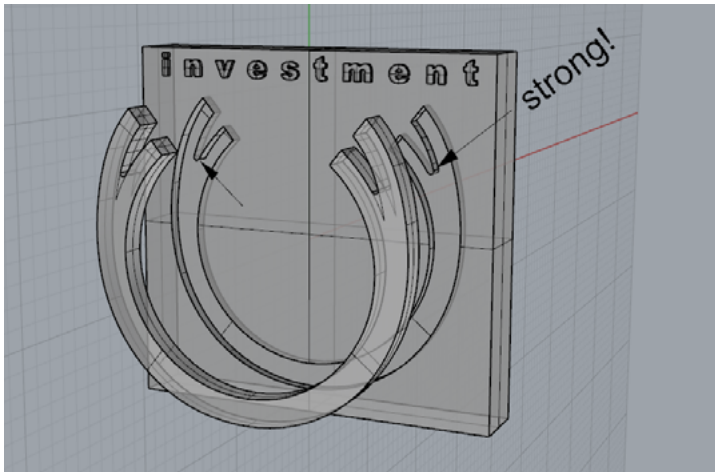

Figure 10.2: By filleting the sharp internal corner, the positive investment becomes much stronger. Redefining that corner with a graver when finishing the casting is simple.

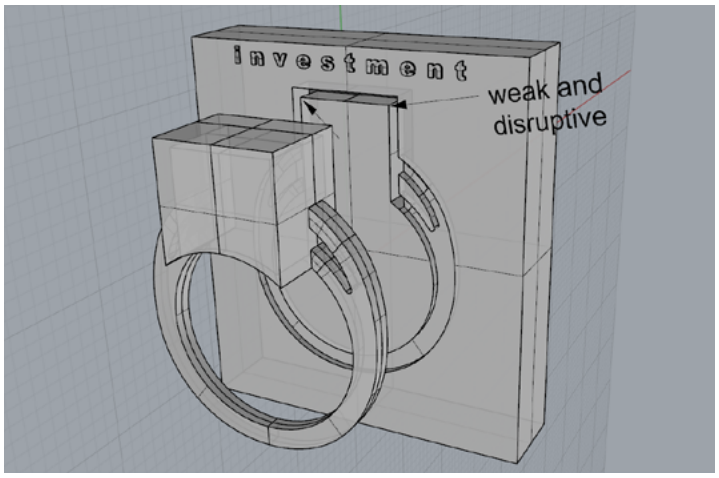

Figure 10.3: Sharp internal corners in this square hollow form cause turbulence and potential breakage of investment.

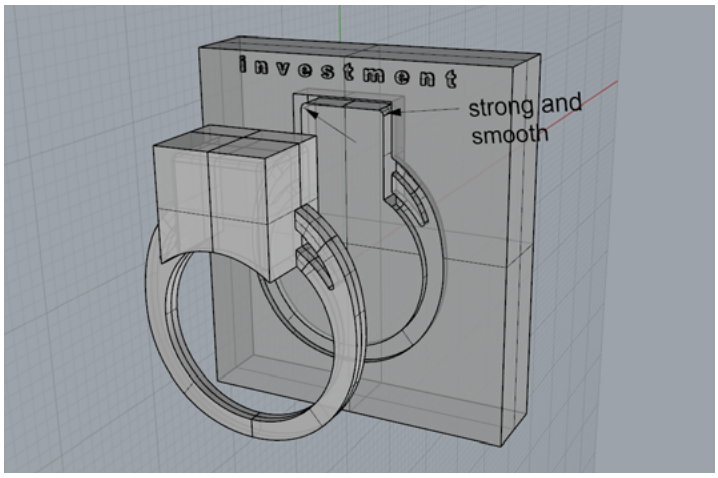

Figure 10.4: Filleting the internal corners provides stronger edges and smoother flow of metal during casting.

ENGRAVED DETAILS

Everyone wants to engrave inside rings! If the images and text are large enough, engraving should not cause any issues. If very fine engraving is desired, the best solution is to find a good laser, machine, or hand engraver. In the examples shown (Fig. 11.1 - 11.4), the letter E was used in various fonts, from block to script. One ring has the letters engraved to a depth of 0.3 mm (Fig. 11.1), the other a depth of 0.5 mm (Fig. 11.3). As with any features built into the piece as opposed to on top of it, such negative spaces should be created with draft. The height of the smallest letters is 1.5 mm, and the smallest letters of the ornate script tend to fail in both depths. This is mostly due to the investment not surviving those thin and intricate details, and also due to approaching the limit of your printer to print very small negative features. These smallest letters seem to do slightly better in the shallower 0.3 mm depth, due to the investment filling these spaces being shorter and thus stronger. When the investment does not survive, particles of that failure can cause damage to the casting. For very small engravings, send it out; for larger letters or images, be aware of how those features will print and invest.

Figure 11.1: Print of ring with 0.3 mm depth of engraving.

Figure 11.2: Casting of ring with 0.3 mm depth of engraving. Note that although the smallest script E is visible, by the time the ring is finished and polished it may lose all definition.

Figure 11.3: Print of ring with 0.5 mm depth of engraving.

Figure 11.4: Casting of ring with 0.5 mm depth of engraving. Note that the smallest letter is better defined and may survive finishing but not reliably.

SURFACE RELIEF

When adding fine details raised above the surface, consider the finishing process. Even the most perfect casting comes out with a matte surface, and in the case of resin prints, there will be some artifacts due to the creation of layers in the printing process.

Although the Form 2 yields an exceptionally smooth surface, those microscopic layers may still remain visible in the casting. The surface of a casting is typically tumbled (a burnishing process), then polished (a subtractive process), to yield the final finish. The polishing process removes material, and if the surface detail is too fine, that detail will be diminished and lose its visual effect during the polishing process.

The simple and effective solution is to exaggerate the relief. The image below (Fig. 12) shows a 0.3 mm diameter "wire" in a grooved ring shank. This will be lost or diminished in effect by the time the piece is finished. By exaggerating the depth of the groove and the height of the "wire" while maintaining the same 0.3 mm width, the final finished pieces will better achieve the desired effect.

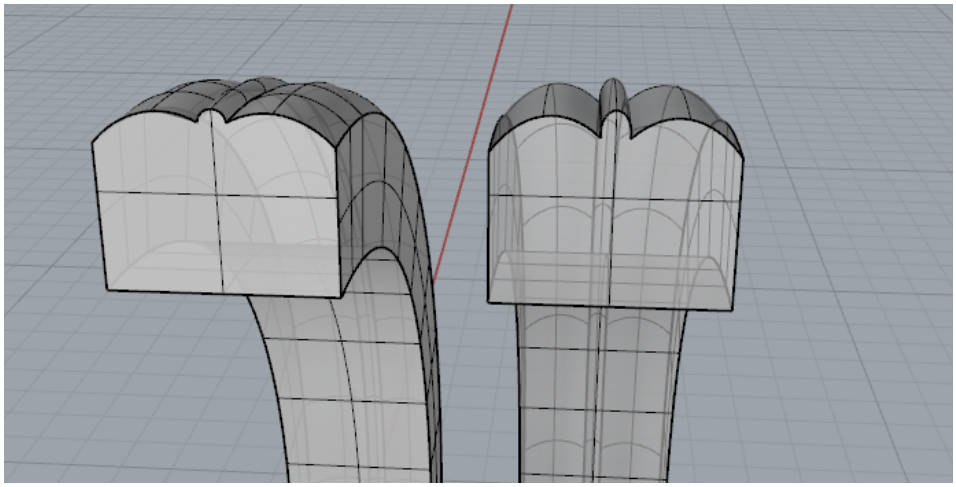

Figure 12: Digital image of designed relief on left, and exaggerated relief to achieve the designed effect after finishing.

WATERTIGHT MODELS

In order to end up with the best print possible, it is important to make sure your digital model is "watertight," meaning that all surfaces of the solid object are joined without any open seams. Check for open seams using analyze commands such as "show edges" found in your CAD program. Repairing models is not always easy, and is beyond the scope of this paper.

Another important detail to note is the difference between grouped components and booleaned components. Grouping collects a number of individual constructions and allows them to be manipulated as a single part, while the boolean process creates one unified construction from a number of individual constructions. PreForm, the software that prepares models for printing on the Form 2, is capable of repairing many issues, such as open seams and grouped vs. booleaned parts. Grouped and "leaking" (as opposed to watertight) parts will sometimes print after being repaired by PreForm. However, sometimes PreForm can't correct all of the errors in your file and allows it to print anyway. Pictured (Fig. 13) is the same part, one from a grouped file with some open edges, and the other from a booleaned and watertight file. The most reliable approach is to check and repair your digital models before sending them to the printer.

Figure 13: The upper print is the result of printing a file using grouped components without properly joining into a "watertight solid." The lower print is the result of those same components joined together correctly to form a "watertight solid."

Orientation and Supports

SUPPORTS

As discussed earlier, printed parts are grown by hardening progressive layers of resin between the build platform and the clear surface of the resin tank. The layers are hardened within the space of the build area per the geometry of your model. The layers need to be connected to the build platform, or each hardened layer will simply float off into the tank.

Supports run from the surface of the build platform to the part, and keep the part tethered so that progressive layers will accurately build upon each other without floating away. PreForm's Slider tool, located to the right of the screen, allows you to drag up and down to individually inspect each layer.

Make sure each layer can be traced all the way from the base to the last tips of your part. If a line can't be drawn from top to bottom in the case of overhanging features, when dragging the slider tool you may notice "islands" appearing. The printer will draw these shapes irregardless. This can lead to floating specks of cured material in the tank, which can cause problems later in the build. One way to remedy this is to ensure that any islands are supported. That way, you can draw a line from the base of the part, through the printed support and up to the tip of your part. For more on this idea, watch the "Local Minima and Islands" section in our tutorial **video on "What Supports Do."**

There are three options for supporting your part:

1. PreForm automatically creates a support structure based on the parameters selected for density and size of touch point.
2. PreForm automatically creates a support structure, and you can edit the placement, size, and number of touch points with the "Edit" button on the support screen. PreForm will generate touch points as small as 0.3 mm. Small sizes have the advantage of supporting small details without obscuring them, but they offer less structural support.
3. You can create your own support structure in your model. The small scale and lightweight structure of jewelry can allow for simplified supports, as in some of the ring examples shown earlier with only a single large support at the bottom of the shank.

Eliminating additional supports allows for easier clean up and cleaner surface finish, but it may mean the part is not supported completely. Experiment, try different configurations, and learn your printer.

There is one caveat here: when prints fail, they leave residue in the resin tank, and the resin must then be filtered and the tank cleaned to to remove such particulate and ensure there is no contamination for the next printing job (**read our "Cleaning the Resin Tank" documentation for more information**). After you have done this a few times, it goes pretty quickly, so do not use this as an excuse to stop experimenting!

Figure 14.1: Failure in sphere ring when printed with PreForm suggested orientation.

Figure 14.2: Sphere ring with opening facing "up" (or down in actual build in order to not capture resin), lowest surface of sphere shows slight deformation.

Figure 14.3: Sphere ring with CAD generated support and base, "incorrect" orientation because of potential for trapping resin inside sphere, actually gave the best result.

EFFECT OF ORIENTATION ON PRINTING

Print success is contingent on how parts are oriented during printing. For the simplest parts, orientation is less critical, but as parts become more complex, thoughtful and correct orientation makes a difference. Remember the forces acting upon each layer of a print: peel and resin flow. When viewing a part in PreForm, the part is displayed on top of the surface of the build platform. The Form 2 build platform prints upside down in relation to the image shown in PreForm.

There are two main constraints to take away from this. First, printing large flat surfaces parallel to the build platform subjects those surfaces to significant peel and flow forces, and requires massive supports to be successful. The easiest fix is to angle such surfaces such that only portions of the surface are subject to printing forces at any one time. Second, hollow objects can trap resin if the opening of the object is oriented above the resin tray. Once the hollow part is sealed, resin can be trapped inside, deforming the final surface and adding mass during the peel/flow process. The easiest solution here is to orient your part so that the opening of the hollow object faces down into the resin tray.

The following examples (Fig 14.1 - 14.6) show various orientations of the same part, most against the rules. For the sphere ring, the automatic angled PreForm orientation (Fig. 14.1) was the only one to fail, but for the square ring, the angled PreForm auto orientation (Fig 14.5) gave the best results in accuracy and surface finish. The square ring with the flat top parallel and close to the build surface performed predictably and shows that surface failed (Fig. 14.4), with artifacts of that failure adhering to the surface of the part. The square ring with single support built into the file (Fig. 14.6) printed almost as well as the PreForm suggestion and would be easier to clean up. The most important thing to learn from these examples is the importance of experimentation in learning to use your printer.

Figure 14.4: Square ring with flat surface parallel to the build platform, flat surface failed.

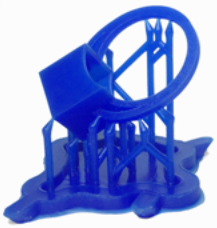

Figure 14.5: Square ring with auto-orientation by PreForm performed best.

Figure 14.6: Square ring oriented against the rules printed fine, creating a closed container with opening facing up.

Part orientation can influence how many supports are necessary. Use the Slider tool in PreForm to make sure all parts of the model are supported. In these first examples (Fig. 15.1 - 15.3), the ring has been angled with a low density of supports, and four of the unsupported prongs did not print. The emerald cut setting has been positioned in an intuitive upright position (Fig. 15.4), and you can see that the internal corner of the very thin heart shape in the gallery is missing (Fig. 15.5 - 15.6). For such a small detail, it would be impractical to add a support to that corner, as cleanup could never be completed cleanly. This could have been prevented by using the Slider tool. Once we flip the emerald cut setting so that the internal heart points are supported by previous layers, they print perfectly (Fig. 15.7).

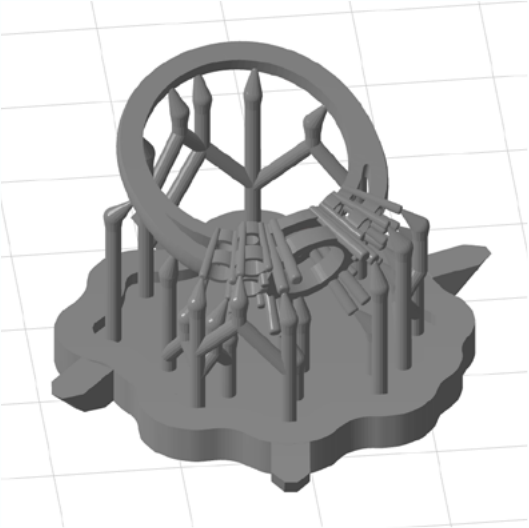

Figure 15.1: Ring with angled orientation.

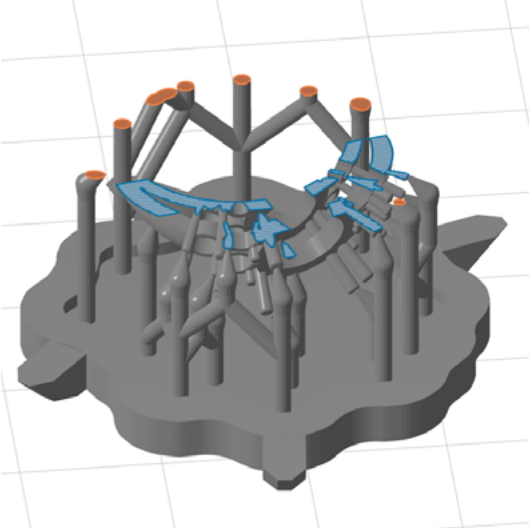

Figure 15.2: Using the slider tool in PreForm to see unsupported islands that will float away during printing.

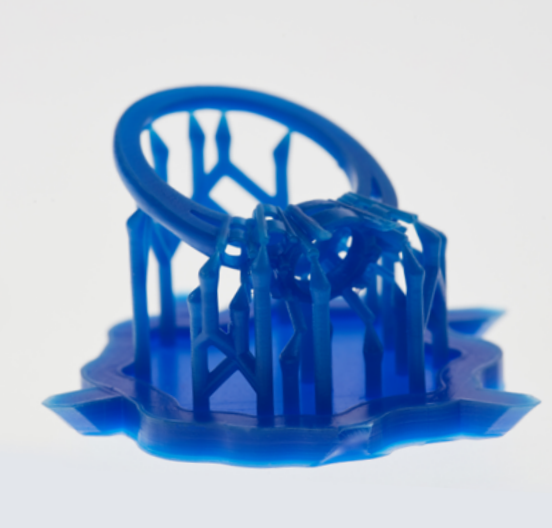

Figure 15.3: Ring printed, showing incomplete build of upper large prongs due to unsupported islands.

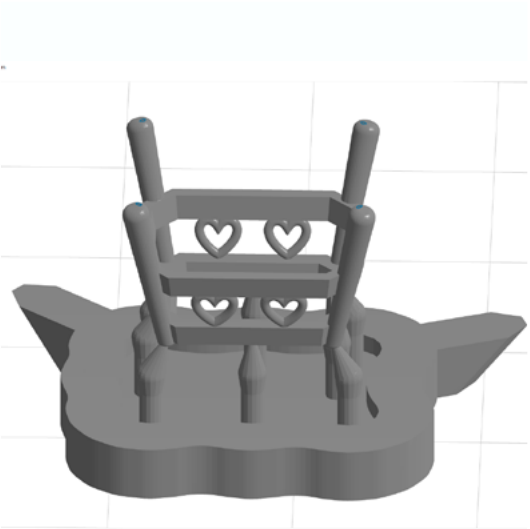

Figure 15.4: Emerald cut setting in upright orientation.

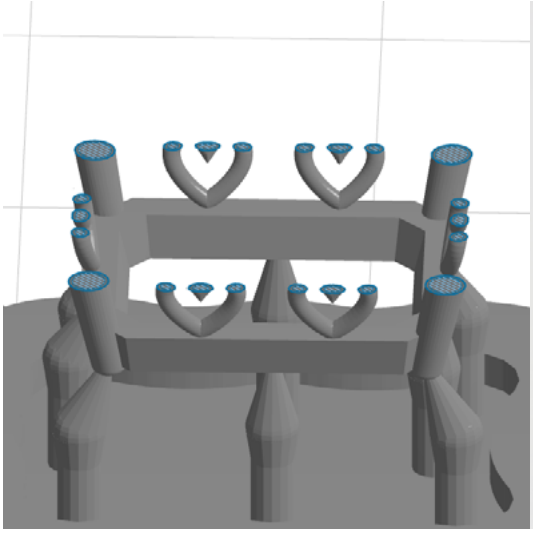

Figure 15.5: Using the slider tool to see that the inner part of the heart shaped filigree will not successfully print.

Figure 15.6: Print of emerald cut setting showing that the inner points of the filagree hearts did not print. Also note, shrinkage occurs before and after prongs attach to upper setting bezel.

Another issue with printing in this orientation can be seen where the prongs of the center stone are attached to the upper bezel of the setting in both ring and setting. Where the prong is not attached to the bezel, there is a very slight shrinking of the resin, a result of going from a relatively heavy part to a much thinner part (Fig. 15.6 and 15.8).

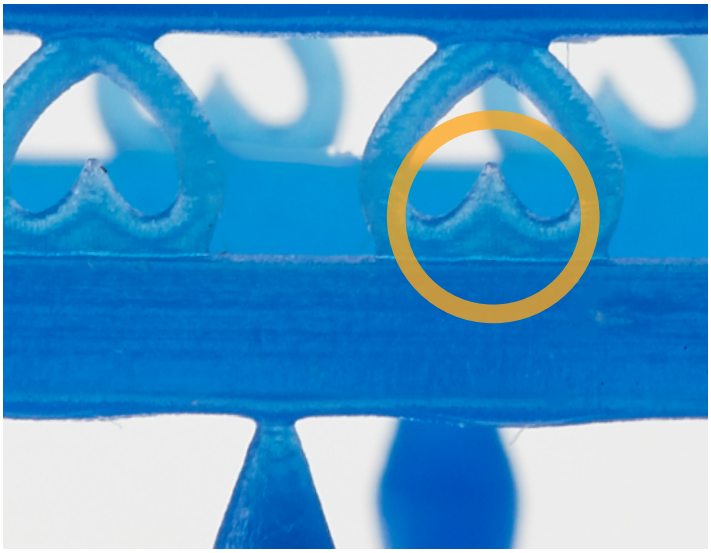

Figure 15.7: Emerald cut setting flipped so that internal features of heart filagree are supported by previous layers.

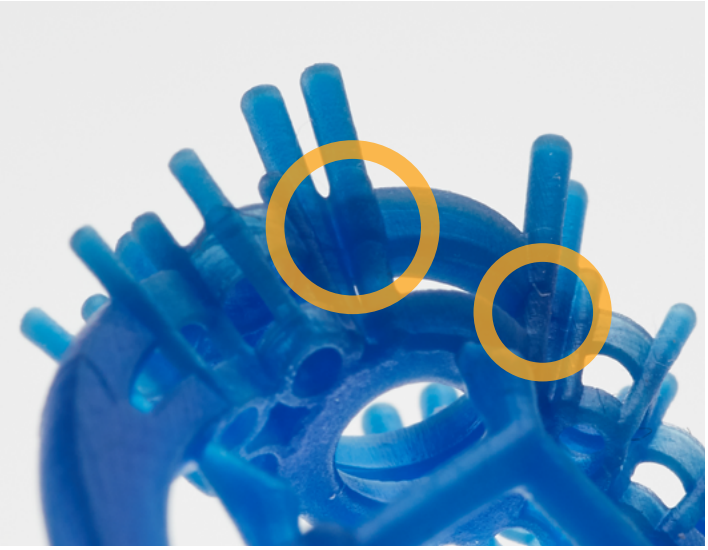

Figure 15.8: This ring was printed in a vertical orientation, and shows shrinkage of prongs before it is attached to the upper setting bezel.

One solution to the problem of resin shrinkage as the part abruptly transitions from thin to thick is to orient the part so that as much of the length of the thin prong is built as it meets the upper setting bezel (Fig. 15.9 - 15.10).

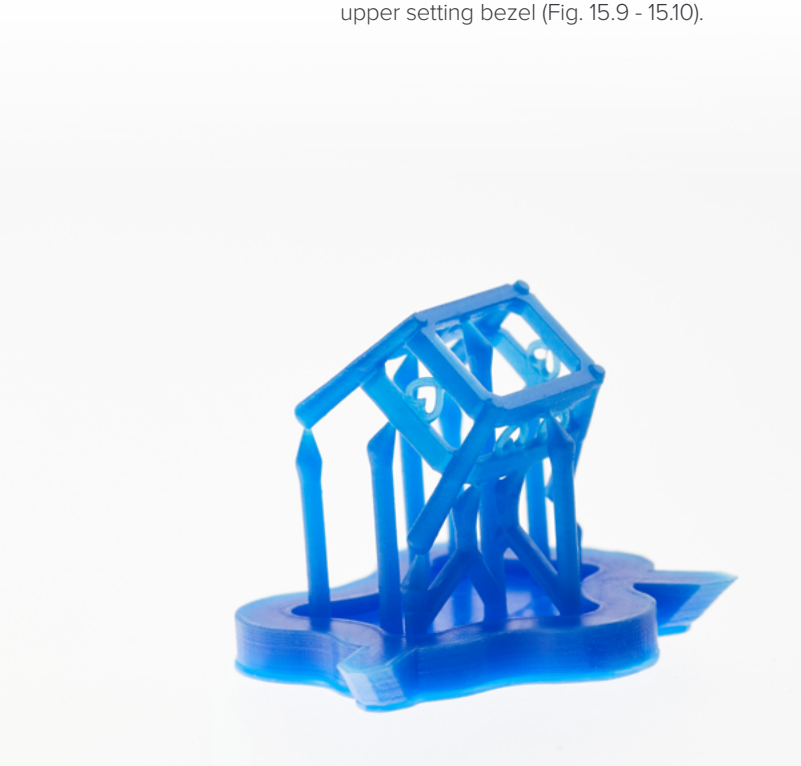

Figure 15.9: Emerald cut setting oriented so that the transition from thick to thin is minimized, significantly improving the blending of prong into bezel.

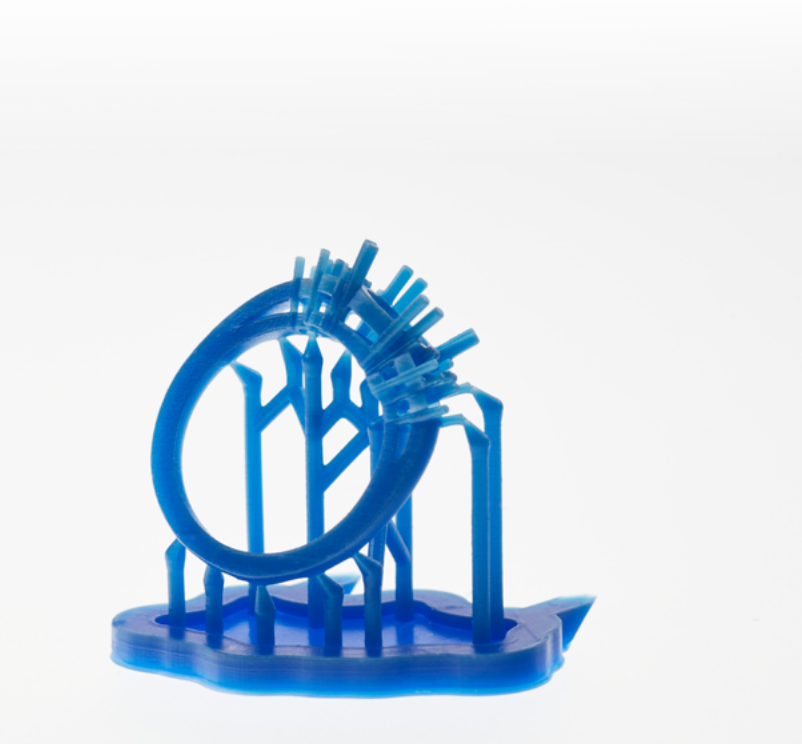

Figure 15.10: Ring oriented so that the transition from thick to thin is minimized, significantly improving the blending of prong into bezel.

A BRIEF WORD ON CASTING

We have already looked at some of the issues with casting printed parts, but other considerations need to be taken when casting, or sending your printed part out to be cast.

Where do you want the sprue, or a better question, where do you not want it? The sprue should be placed a location that allows the best flow of metal into the mold, and one which does not interfere with design components and make cleanup of the casting difficult. If you are not sure where to place the sprue, ask your caster where they would prefer to place it and discuss your concerns with them.

What metal are you casting in? Gold and silver are not a problem, but platinum can be difficult to cast under the best conditions, and even more difficult when casting resins. When casting resins to platinum, most casters recommend printing in a hard resin, then making a mold so that waxes can be used for casting (see our white paper on vulcanization).

Even the best casters occasionally fail to cast some pieces successfully. If your design is extremely complex, it is not a bad idea to send an extra print just in case the first casting is unsuccessful.

Conclusion

The information discussed in this white paper should be used as a guidelines for building successful digital models, but there is never only one correct way to model a design. The most important learning activity you can undertake to master your printer is to understand its strengths and limitations, and experiment to best utilize its strengths and work within its limitations.

Request a Sample Part →

Contact Formlabs to learn how desktop SLA can work for your project.

Sales Inquiries
sales@formlabs.com
617-702-8476
formlabs.com

EU Sales Inquiries
sales-eu@formlabs.com
+44 1765 694053
formlabs.com

China Sales Inquiries
formlabs@elite-robot.com
+86 4006-029-015
elite-robot.com